Current part is item (11) on diagram. Available at www.oshkoshequipment.com

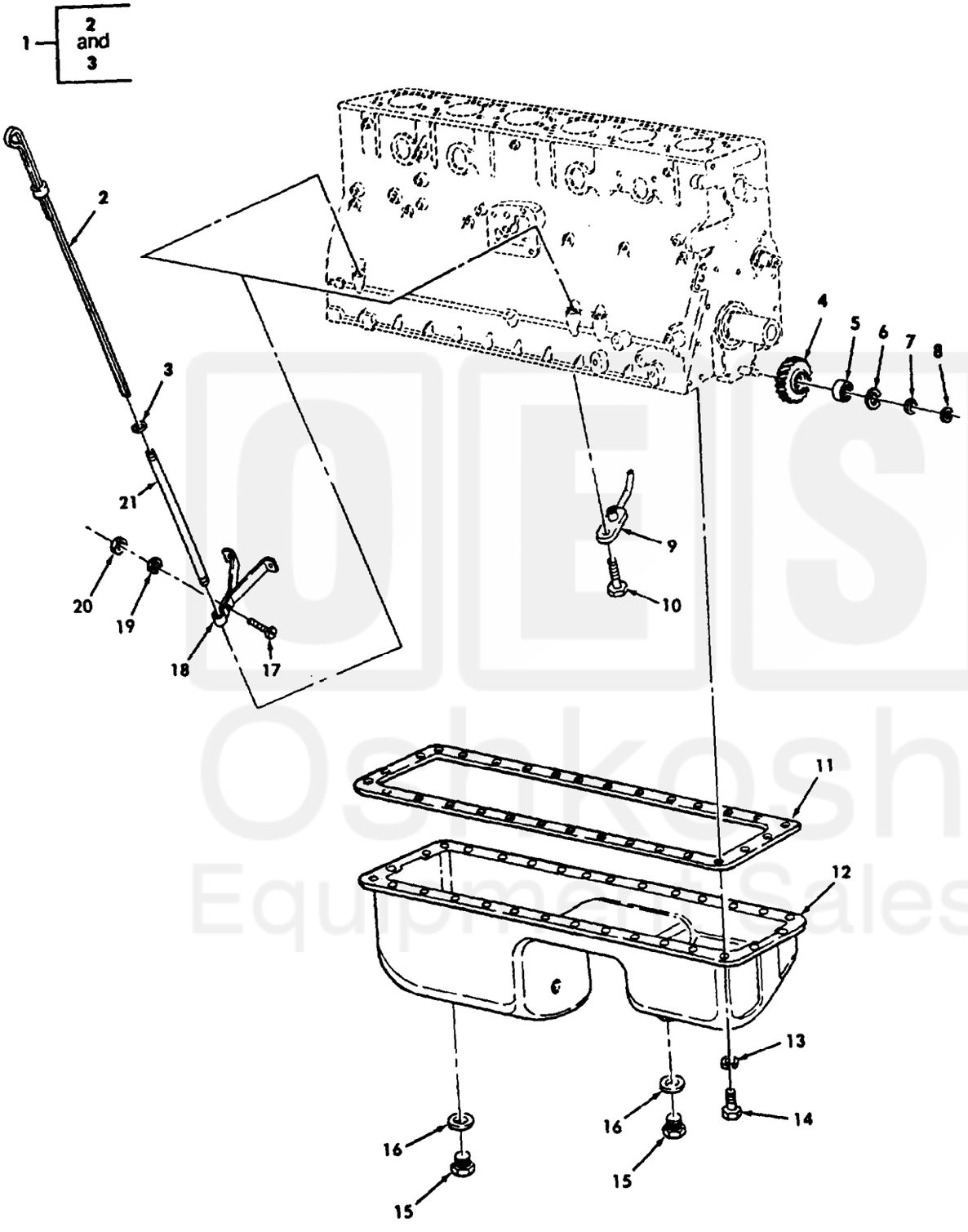

Figure 18. Oil Pan and Oil Pump Idler Gear.

Current part is item (11) on diagram. Available at www.oshkoshequipment.com

(1) ITEM NO	(2) SMR CODE	(3) NSN	(4) CAGEC	(5) PART NUMBER	(6) DESCRIPTION AND USABLE ON CODES(UOC)	(7) QTY
					GROUP 0106 ENGINE LUBRICATION SYSTEM	
					FIG. 18 OIL PAN AND OIL PUMP IDLER GEAR	
1	PAOZZ	6680008871334	19207	10912158	GAGE ROD-CAP,LIQUID	1
2	XAOZZ		19207	10912158-1	.GAGE ROD,LIQUID	1
3	PAOZZ	5330007376332	19207	7376332	.PACKING,PREFORMED	1
4	PAHZZ	3020000789775	19207	10935193	GEAR,HELICAL	1
5	PAHZZ	3110001564681	21335	5204KD	BEARING,BALL,ANNULA	1
6	PAHZZ	5325007541896	96906	MS16625-1185	RING,RETAINING	1
7	PAHZZ	5310008995941	18876	10889966	WASHER,FLAT	1
8	PAHZZ	5325002613918	96906	MS3217-1075	RING,RETAINING	1
9	PAFZZ	2835000748921	19207	10935308	NOZZLE,LUBRICATING	6
10	PAFZZ	5306010114995	96906	MS35764-218	BOLT,SELF-LOCKING	6
11	PAFZZ	5330008853422	19207	10889730	GASKET PART OF KIT P/N 57K1319	1
12	PAFZZ	2815008098141	19207	11610077	OIL PAN	1
13	PAFZZ	5310009594675	96906	MS35340-46	WASHER,LOCK	30
14	PAFZZ	5305002693211	96906	MS90725-60	SCREW,CAP,HEXAGON H	30
15	PAOZZ	5365004721926	19207	7748969	PLUG,MACHINE THREAD	2
16	PAOZZ	5330008342912	96906	MS35769-18	GASKET PART OF KIT P/N 57K1319	2
17	PAOZZ	5305004898350	19207	7748975	SCREW,MACHINE	1
18	PAOZZ	2990004418803	19207	10935375	BRACKET,DIP STICK S	1
19	PAOZZ	5310002857037	96906	MS122031	WASHER,LOCK	1
20	PAOZZ	5310001436481	19207	7748972	NUT,PLAIN,HEXAGON	1
21	PAOZZ	2815009377447	19207	10889899	SUPPORT,OIL GAGE	1

END OF FIGURE

Current part is item (11) on diagram. Available at www.oshkoshequipment.com